The information contained in this drawing is the confidential property of Platinum Energy Services ULC. No part thereof shall be reproduced or communicated to a third party without written authorization from Platinum Energy Services ULC.

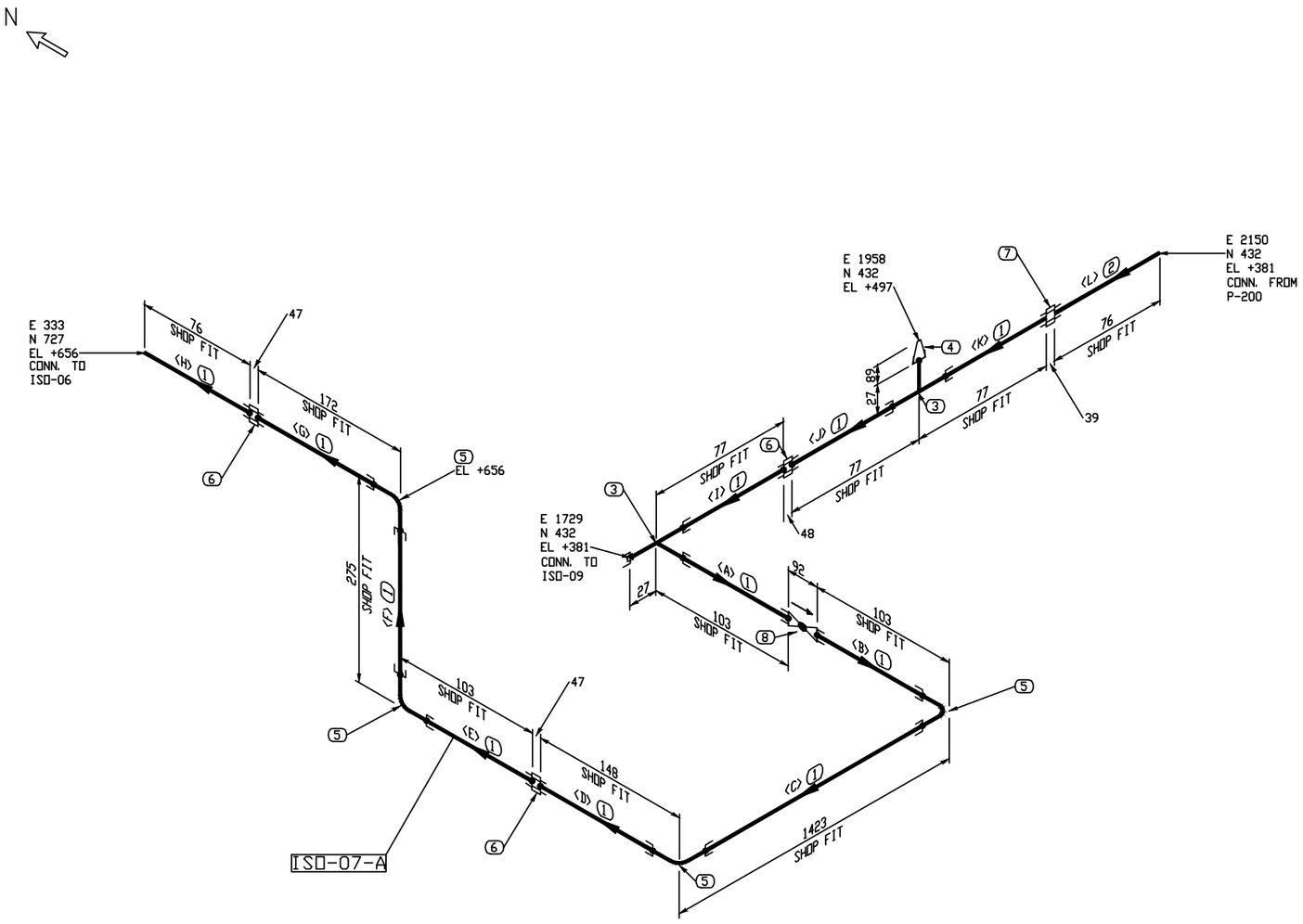

BILL OF MATERIAL

MARK	SIZE	DESCRIPTION	QTY	WEIGHT
1	1	PIPE, S/80 SMLS, SA-106-B PBE	2310 MM	7.5
2	1	PIPE, S/80 SMLS, SA-106-B TBE	76 MM	0.3
3	1X1	TEE, STR. SW 3000LB, SA-105N	2	2.9
4	1X1/2	SWAGE, CONC. S/160 x S/160, SA-234-WPB PBE-TSE	1	0.3
5	1	90 ELL, SW 3000LB, SA-105N	4	4.1
6	1	UNION, SW 3000LB, SA-105N	3	4.0
7	1	UNION, SWxTHRD 3000LB, SA-105N	1	1.4
8	1	GLOBE VALVE, 800LB SW	1	4.0
		TOTAL FABRICATION WEIGHT		24.1

CUT PIPE LENGTH

PIECE NUM	LENGTH (MM)	SIZE (INCH)
<A>	76	1
<B>	76	1
<C>	1369	1
<D>	121	1
<E>	76	1
<F>	221	1
<G>	145	1
<H>	76	1
<I>	50	1
<J>	50	1
<K>	50	1
<L>	76	1

THRD. & S.W. PIPING
- SHOP RUN
- SHOP CHECK
- SHOP SUPPORT ON ASSEMBLY

NOTES:

1. REGISTERED QUALITY CONTROL PROGRAM AQP 1084 FOR FACILITY AT 7550-114 AVE SE CALGARY AB.
   REGISTERED QUALITY CONTROL PROGRAM AQP 1316 FOR FACILITY AT 502 MITCHELL STREET NORTH REDCLIFF AB.
2. EXTERIOR & INTERIOR OF PIPE TO BE FREE OF WELD SLAG, SPATTER, GREASE, MOISTURE, ETC.
3. ALL DIMENSIONS ARE IN MILIMETERS, UNLESS OTHERWISE NOTED.
4. ALL PIPING CUT LENGTHS ARE CALCULATED WITH A (3 mm) WELD GAP.
5. FOR TACK WELDS USE PES-WPS-02
6. DESIGN PRESSURE EQUALS MAWP.

LINE NUMBER: 1"-NPT_300_H. P. GLYCOL SUPPLY | SPEC: 600# | FLUID SERVICE: NORMAL FLUID SERVICE

FITTING TO PIPE	SOL/TOL/WOL	TRANSITION WELD	PIG BAR WELD	RFSO FLANGE	SOCKET WELD
1.) PES-WPS-03	2.) PES-WPS-01	3.) PES-WPS-21	4.) PES-WPS-01	5.) PES-WPS-01	6.) PES-WPS-01

REV.	REVISION DESCRIPTION	DATE	BY	CHK'D	APP'D
0	ISSUED FOR CONSTRUCTION	17-07-07	LL	BX	DG

DESIGN DATA

PIPE CODE	ASME B31.3 (LATEST EDITION & ADENDA)	WPS	PES-WPS-01/03
DES. PRESS.	9928 kPa (1440 PSI)	CA	1.6mm (0.0625")
DES. TEMP.	38°C (100°F)	SANDBLAST	SSPC-SP3
MMDT	-29°C (-20°F)	PRIME	(1) COAT OF WARM GRAY DTM
TEST PRESS.	14892 kPa (2160 PSI)	PAINT	(1) COAT OF WARM GRAY DTM
RADIOGRAPHY	10%	INSUL	NO
PWHT	NO	IMPACT TEST	NO
		HEAT TRACE	NO

PLATINUM ENERGY SERVICES ULC
A Trinity Industries Canada Company
CALGARY, ALBERTA

DRAWN BY	LL	17-07-07
CHK'D BY	BX	17-07-07
APP'D BY	DG	17-07-07

CLIENT: STOCK

PROJECT: 24" OD X 28'-0" S/S 1440 PSI AB SOUR DEHY. PACKAGE PIPING ISOMETRIC

FROM: P-200
TO: ISO-06 & ISO-09

JOB NO	DWG. NO.	SHT	REV.
30086	30086-ISO-07	1 OF 1	0

S:\TRANSFERS\UNIT NUMBER'S\30000\30086\30086-ISO-07.DWG